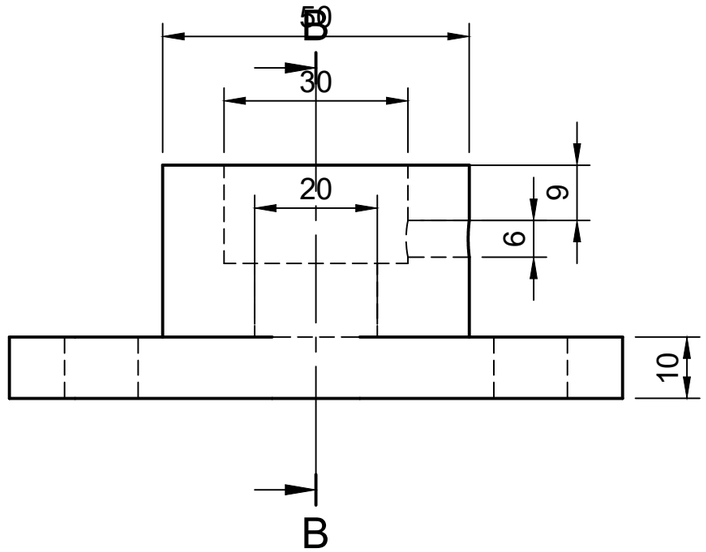

FRONT VIEW

B-B (1:1)

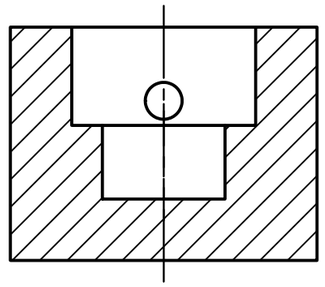

SECTION VIEW

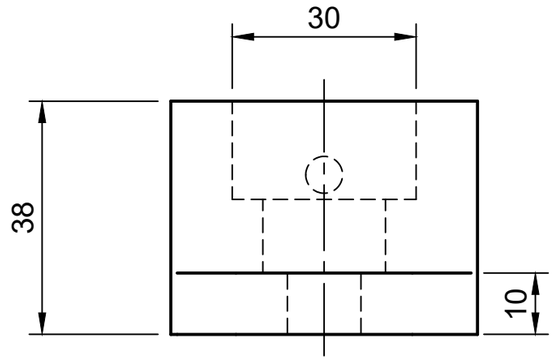

SIDE VIEW

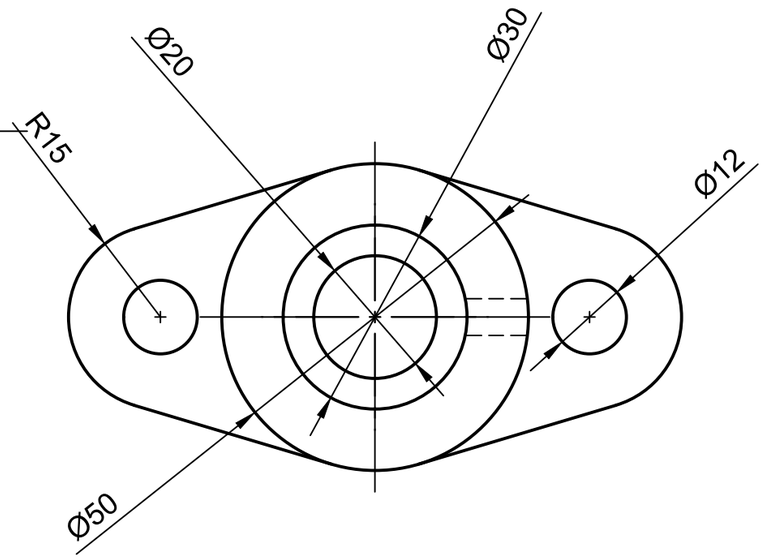

TOP VIEW

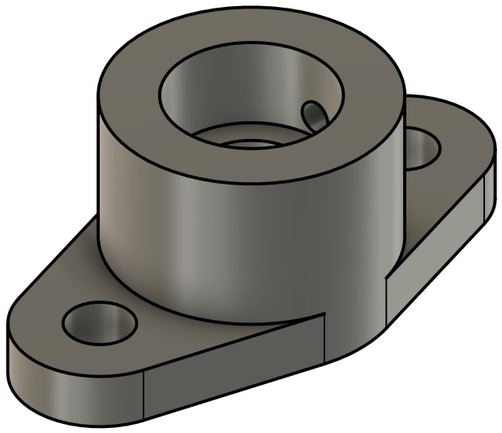

Parts List			
Item	Part Name	Material	Mass
1	8- CUT SECTION OF SOLIDS (~recovered)	Steel	577.539 g

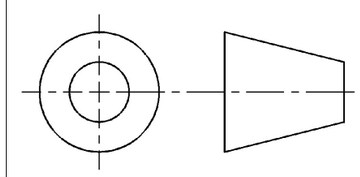

Dept.	Technical reference	Created by	Approved by
IT	212225220086	RITIKA S	Dr. SARAVANAN MP
		Document type: SECTION OF SOLIDS	Document status:
		Title: 8- CUT SECTION OF SOLIDS	DWG No.
			Rev. 4.1 / Date of issue 24-02-2026 / Sheet 8/11